Corian® Specification Sheet: Calm 8815

[Revised April 2021]

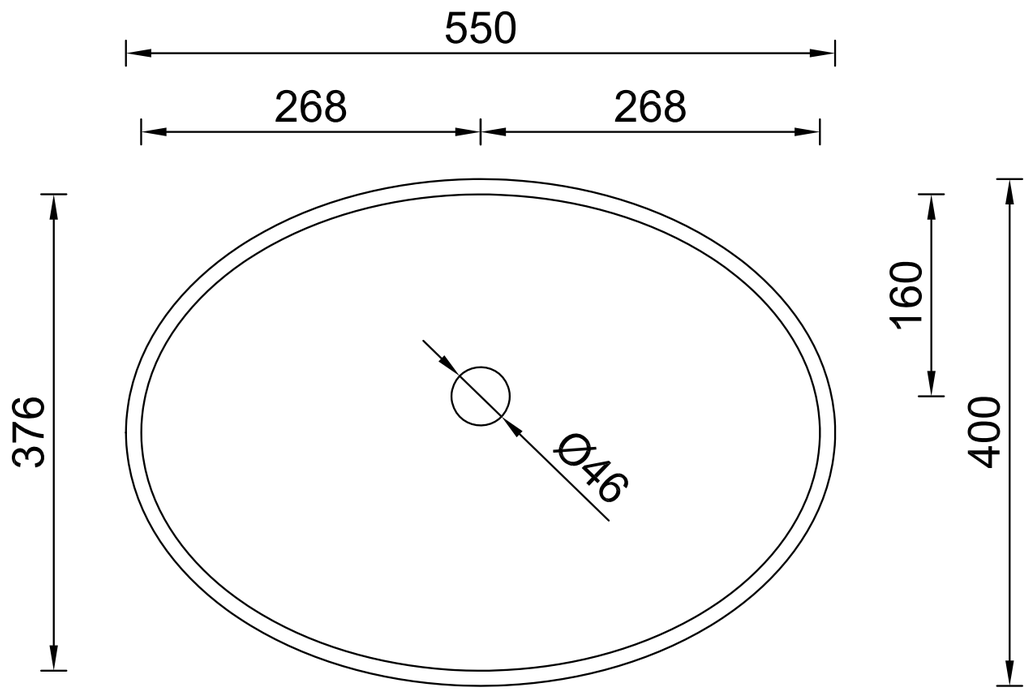

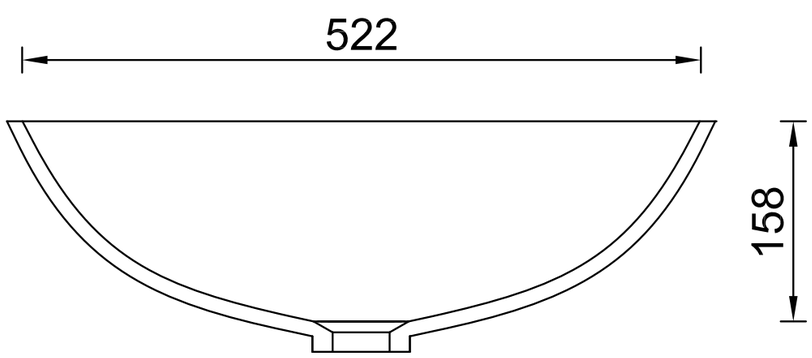

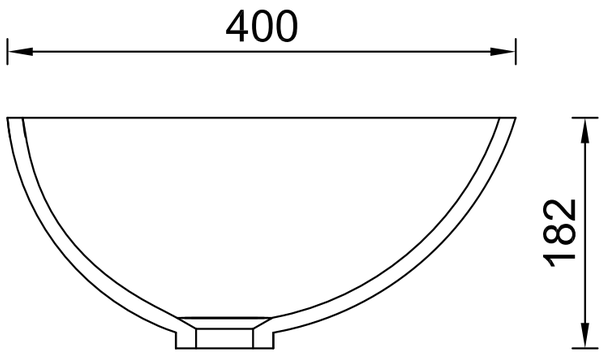

Head Office & Showroom
2/5-11 Mellor St, West Ryde NSW 2114
P: 1300 795 485 E: info@scfinteriors.com.au