Corian® Specification Sheet : 4221 Washplane

[Revised November 2019]

Notes:

Tap hole cutouts not included, drawing for location reference only.
All external edges sanded to 2mm radius
Top surface sanded to semi-gloss finish

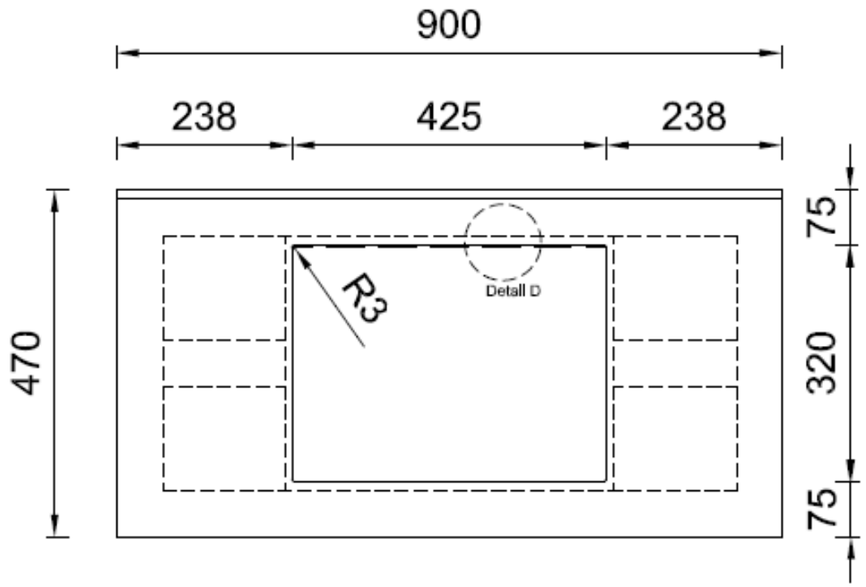

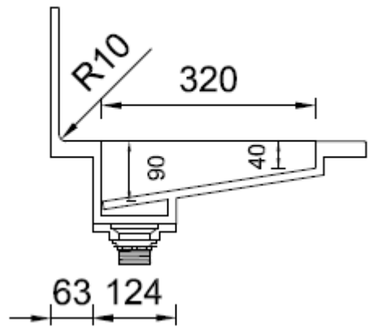

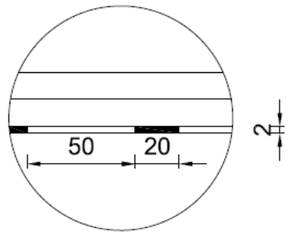

Detail D
Drainage Line

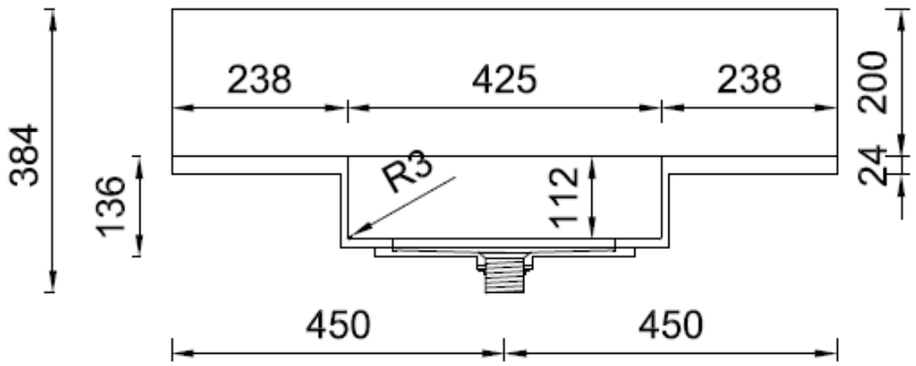

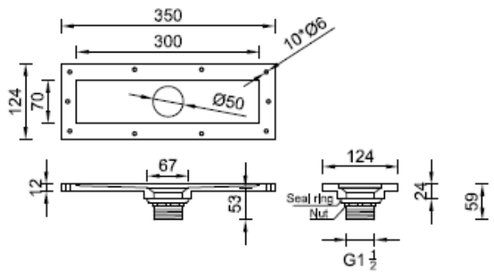

Waste Kit

3	1 waste fitting, pre-assembled to #2
2	1 waste kit, pre-assembled to #1
1	1 Corian Washplane 4221
#	Packing List

Scf INTERIORS SOLID SURFACE FABRICATIONS

Head Office & Showroom
2/5-11 Mellor St, West Ryde NSW 2114
P: 1300 795 485 E: info@scfinteriors.com.au

CORIAN® SOLID SURFACE